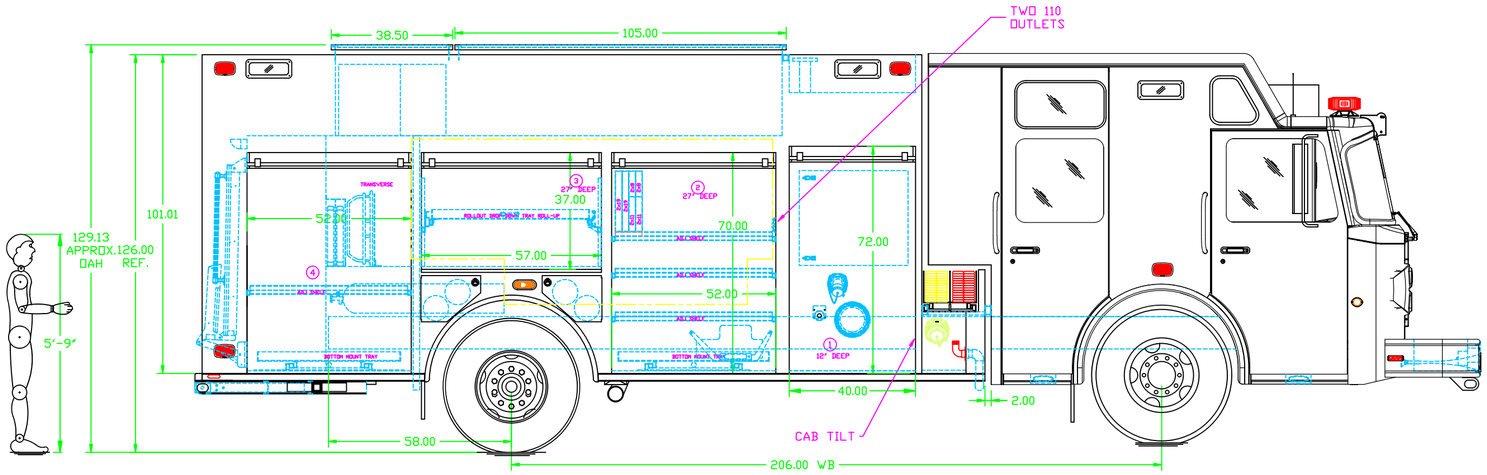

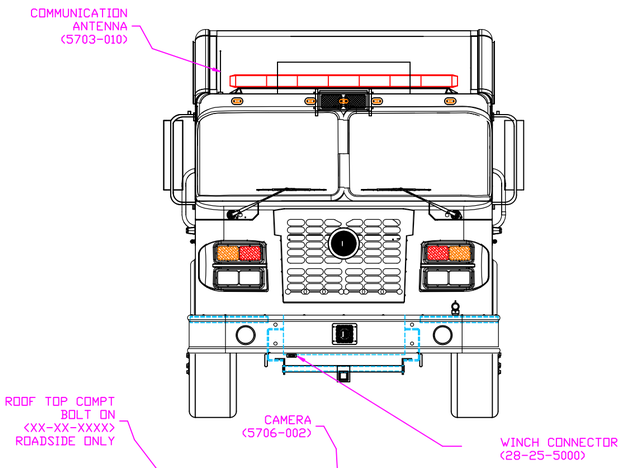

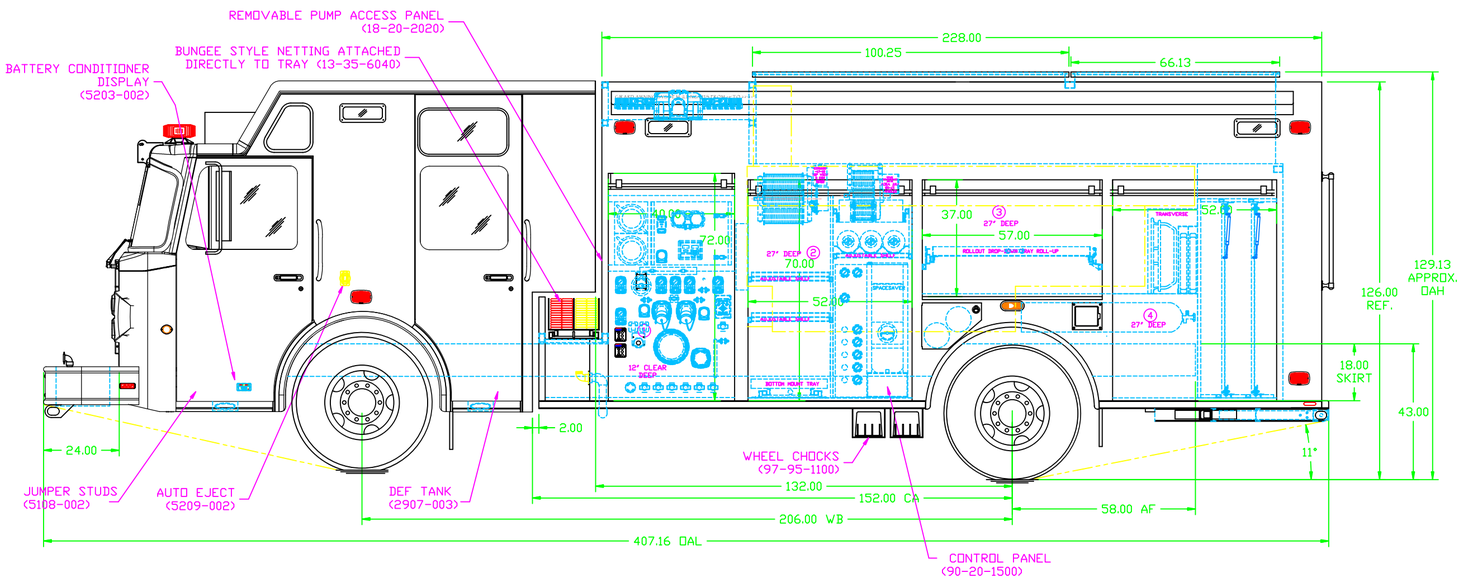

PRINT APPROVAL

I HAVE EXAMINED THIS DOCUMENT AND APPROVE IT WITH NOTED REVISIONS, IF ANY, IN RED.

SIGNATURE _____

DATE _____

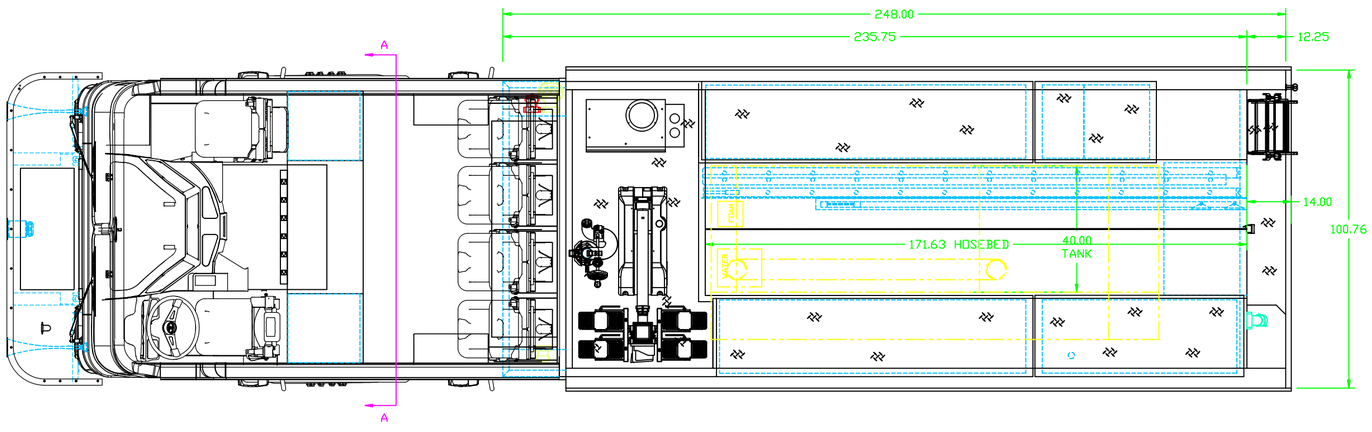

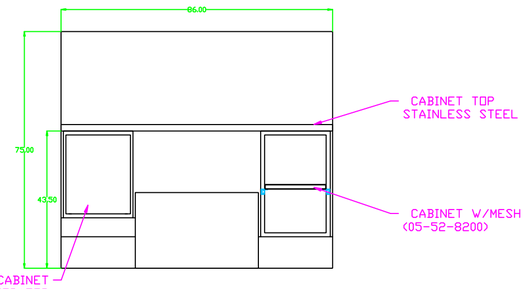

SECTION A-A

2000 GPM HALE QMAX XS PUMP
1000 GAL. POLYPROPYLENE TANK
74472 JOB NUMBER

NO OVERALL LENGTH LISTED (33-49-1000) 34'-8"
NO OVERALL HEIGHT LISTED (33-49-2000) 10'-8"

LTR	DATE	BY	DESCRIPTION
C	9/01/15	JK	REVISED PER SALES MARK-UP
B	8/21/15	JK	REVISED PER SUBMITTAL MEETING
A	5/14/15	JK	REVISED SHANE'S E-MAILS

MARION RESERVES THE RIGHT TO MAKE MINOR DIMENSIONAL CHANGES, AND DESIGN AND COMPONENT CHANGES FOR PRODUCT IMPROVEMENT

CHASSIS SPECS
CHASSIS: SPARTAN
MODEL: METRO STAR MFD
WB: 206" CA: 152"

MARION

MARION BODY WORKS, INC.
P.O. BOX 500
MARION WISCONSIN 54950-0500
715/754-5261 FAX 715/754-5776

TITLE PUMPER, MIDSHIP, 1500/1000/30
FOR CHIKAMING, MI
DRAWN BY JK APPROVD BY DATE 5/13/15 SCALE 1/20
DRG. NO. 98043070 SHEET 1 OF 1