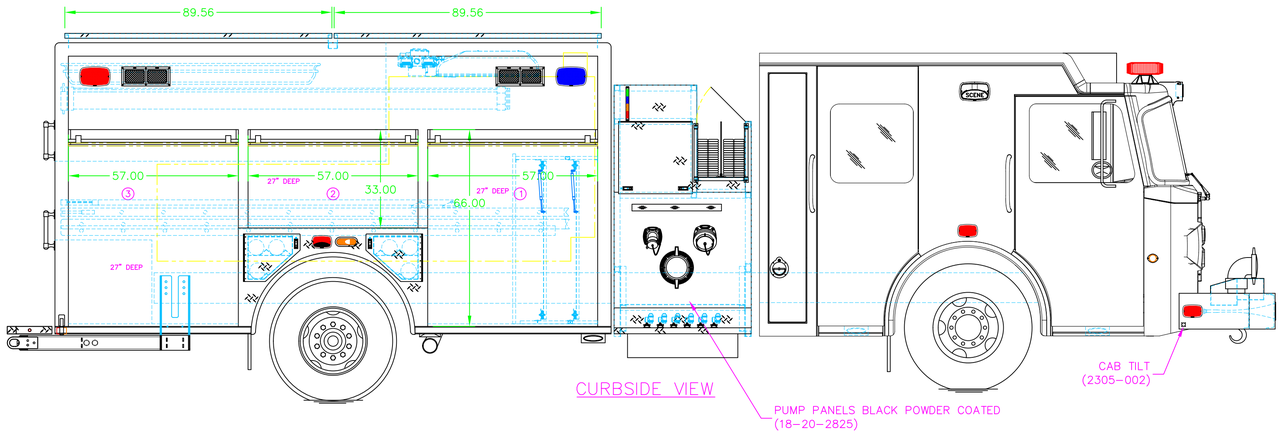

CURBSIDE VIEW

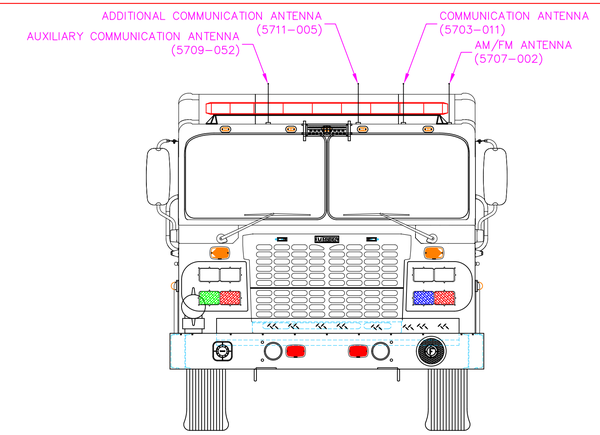

FRONT VIEW

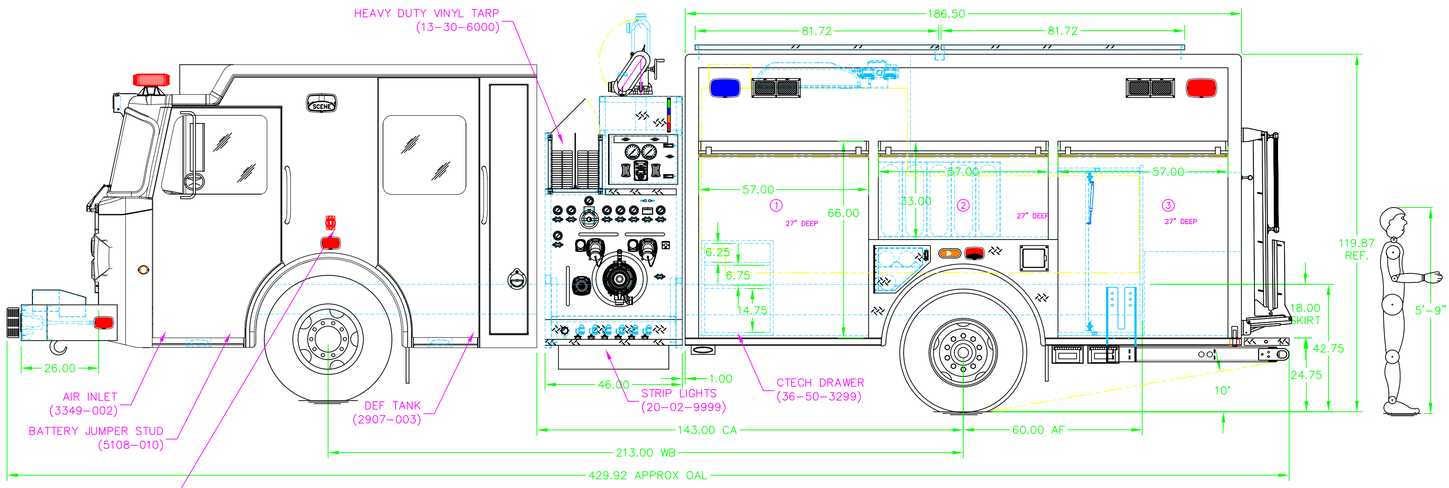

DRIVERSIDE VIEW

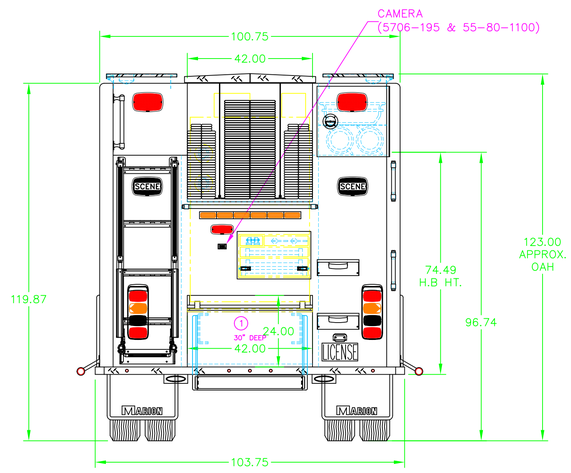

REAR VIEW

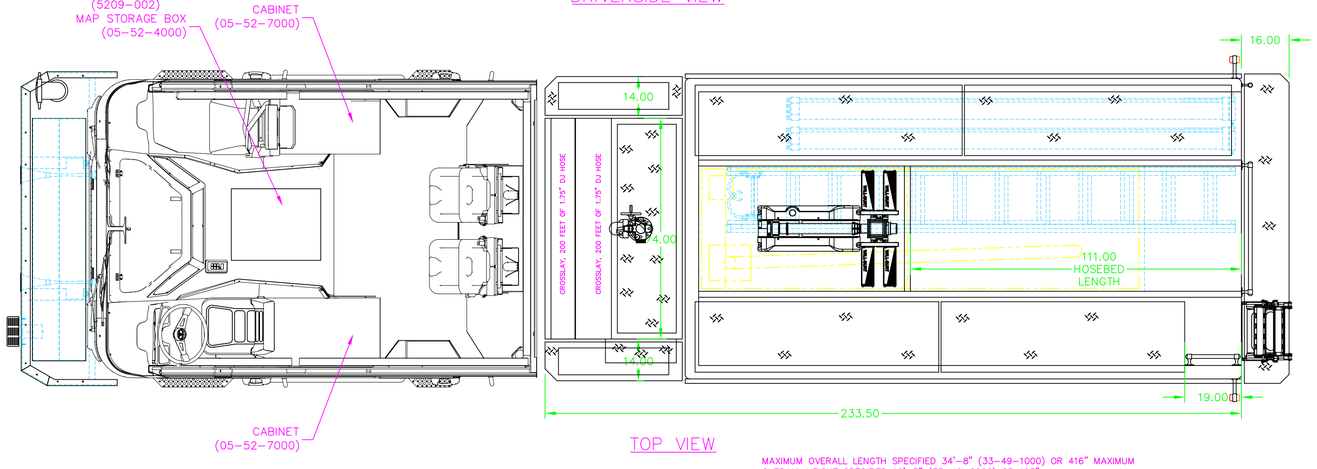

TOP VIEW

1500 GPM WATEROUS CSU
3.0 WATEROUS AQUIS FOAM SYSTEM
750 GALLON WATER TANK
20 GALLON INTEGRAL FOAM TANK
BID MBW JOB NUMBER

MAXIMUM OVERALL LENGTH SPECIFIED 34'-8" (33-49-1000) OR 416" MAXIMUM
OVERALL HEIGHT SPECIFIED 10'-5" (33-49-2000) OR 125"

LTR	DATE	BY	DESCRIPTION

MARION RESERVES THE RIGHT TO MAKE MINOR DIMENSIONAL CHANGES, AND DESIGN AND COMPONENT CHANGES FOR PRODUCT IMPROVEMENT

CHASSIS SPECS	
CHASSIS	SPARTAN
MODEL	GLADIATOR LFD 10" RR
WB	213"
CA	143"

MARION
MARION BODY WORKS, INC.
P.O. BOX 500
MARION WISCONSIN 54950-0500
715/754-5261 FAX 715/754-5776

TITLE PUMPER, MID, WATEROUS, 1500/750/20
FOR BRISTOL KENDALL, IL
DRAWN BY CZ | APPRVD BY | DATE 5/22/19 | SCALE 1/20
DRG. NO. 20190031 | SHEET 1 OF 1