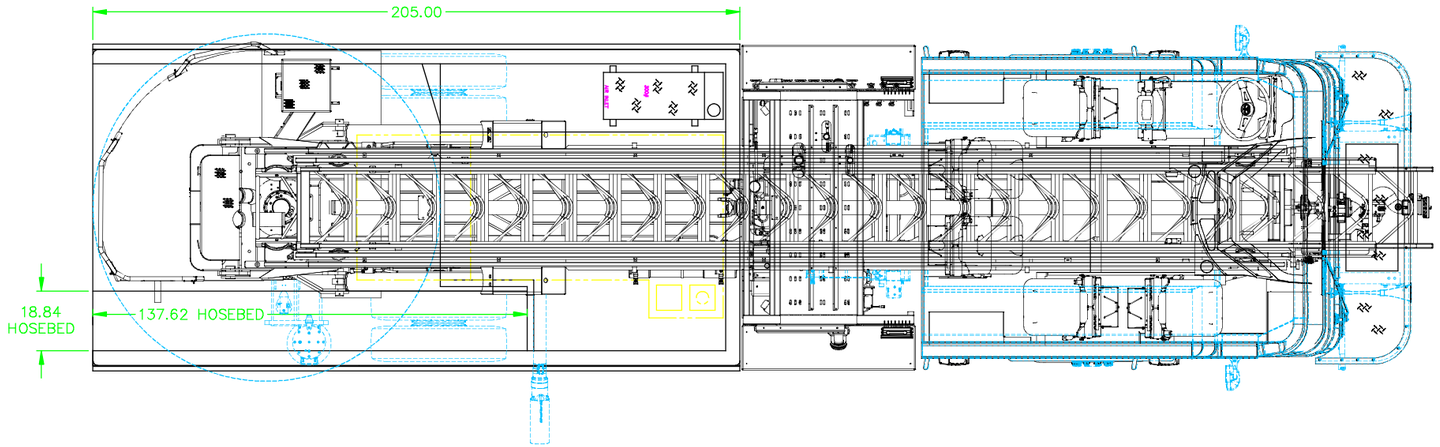

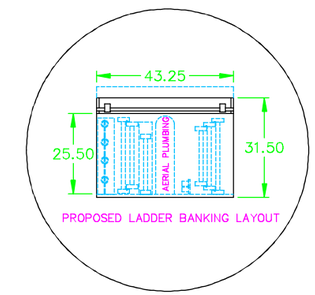

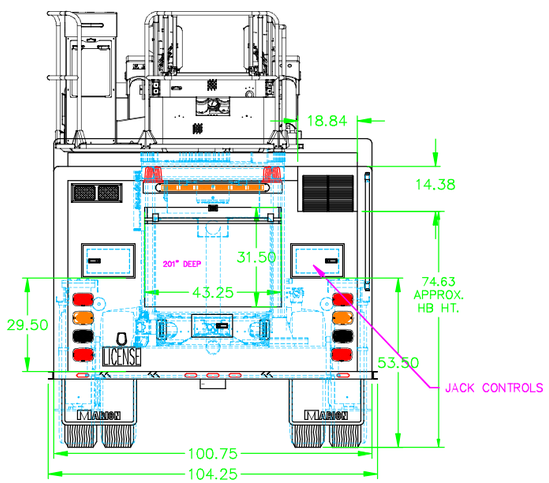

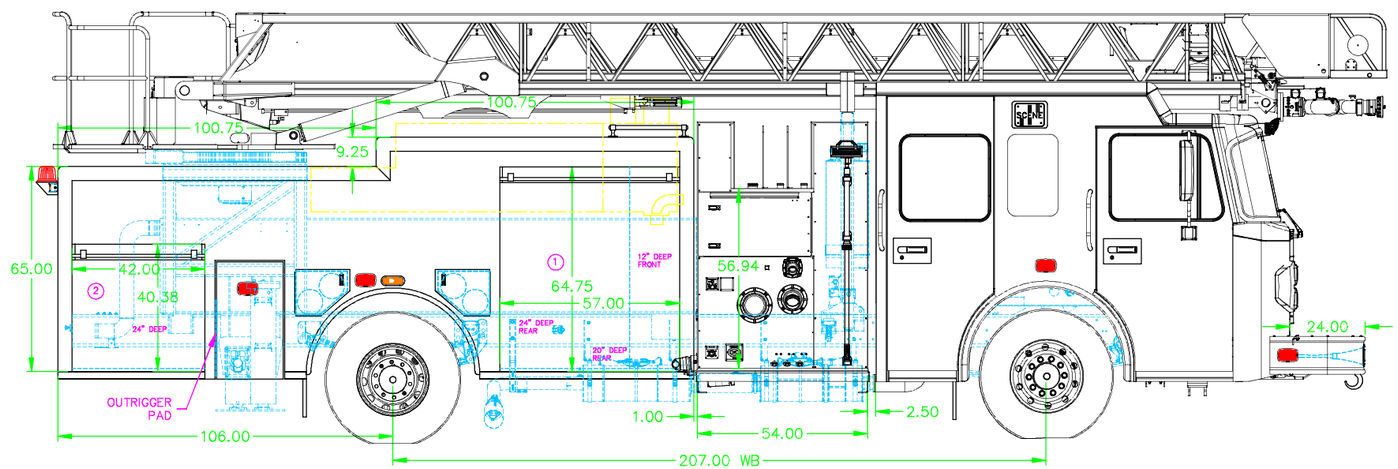

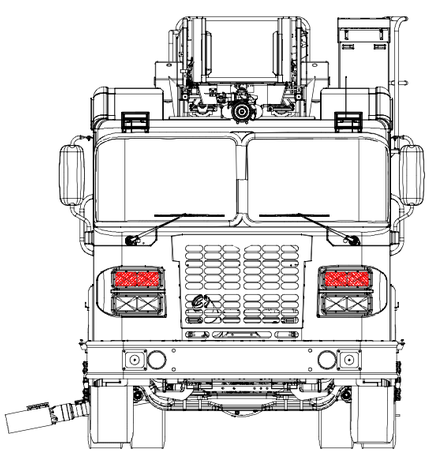

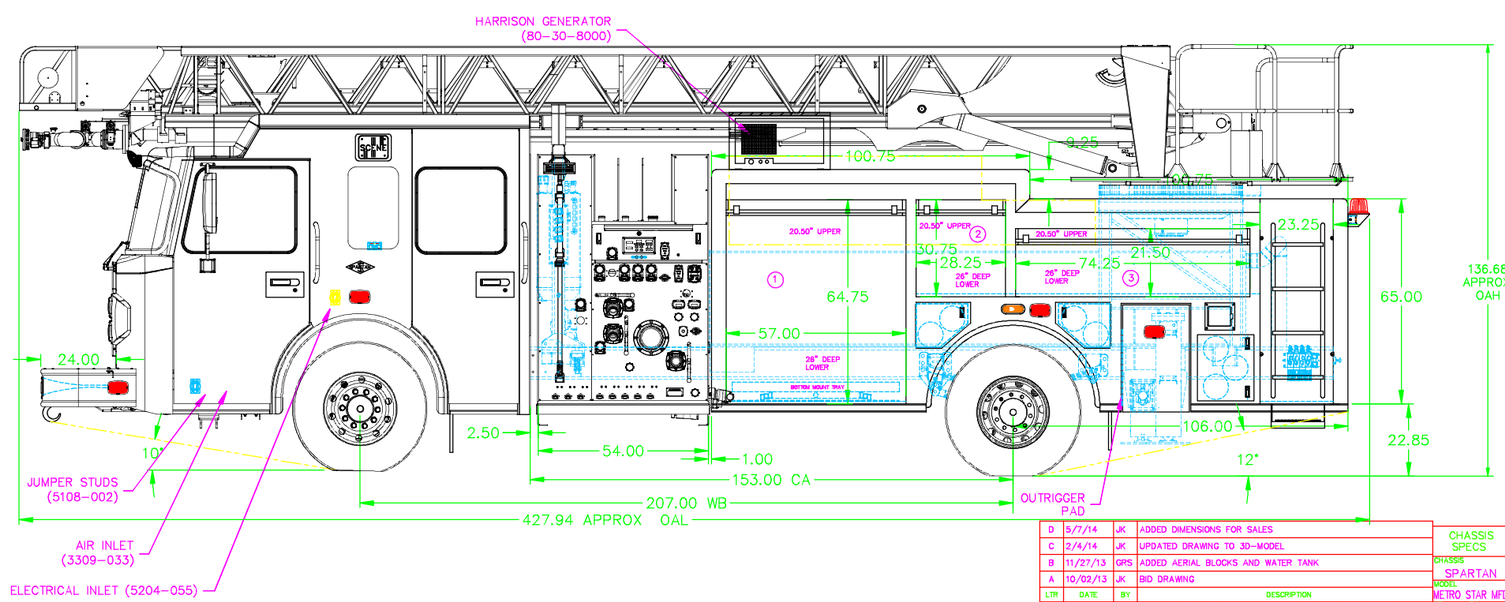

68534/72306 MBW JOB NUMBER
500 GALLON WATER TANK
20 GALLON INTEGRAL FOAM TANK

LTR	DATE	BY	DESCRIPTION
D	5/7/14	JK	ADDED DIMENSIONS FOR SALES
C	2/4/14	JK	UPDATED DRAWING TO 3D-MODEL
B	11/27/13	GRS	ADDED AERIAL BLOCKS AND WATER TANK
A	10/02/13	JK	BID DRAWING

MARION RESERVES THE RIGHT TO MAKE MINOR DIMENSIONAL CHANGES, AND DESIGN AND COMPONENT CHANGES FOR PRODUCT IMPROVEMENT

CHASSIS SPECS

CHASSIS: SPARTAN
MODEL: METRO STAR MFD
WB: 207" CA: 153"

MARION

MARION BODY WORKS, INC.
P.O. BOX 500
MARION WISCONSIN 54950-0500
715/754-5261 FAX 715/754-5776

TITLE AERIAL, 75FT. REAR MOUNT, WATEROUS
FOR HOBART, IN

DRAWN BY JK | APPROVED BY | DATE 10/02/13 | SCALE 1/24

DRG. NO. 98040060 | SHEET 1 OF 1