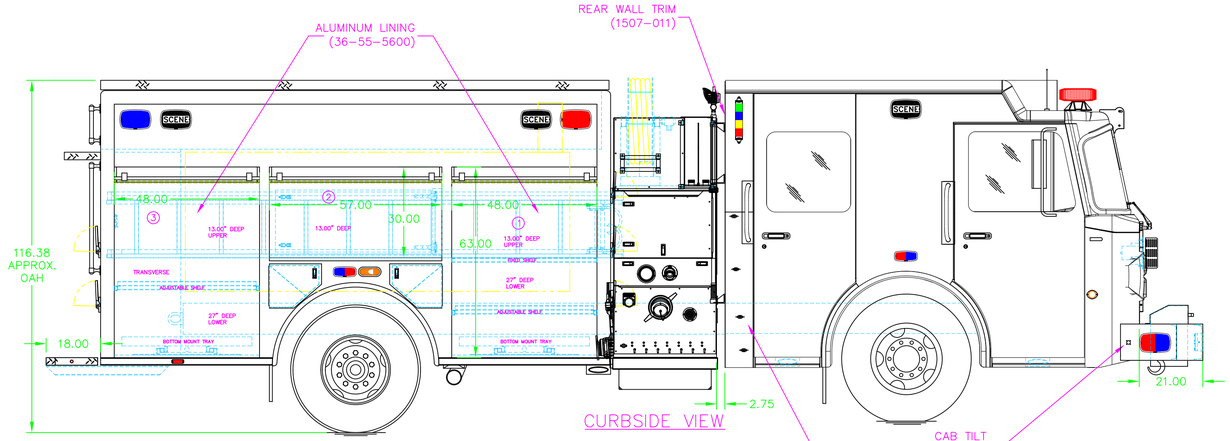

CURBSIDE VIEW

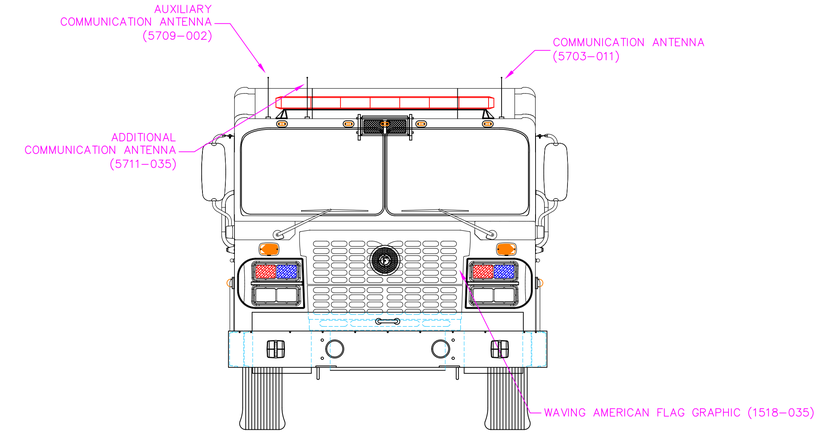

FRONT VIEW

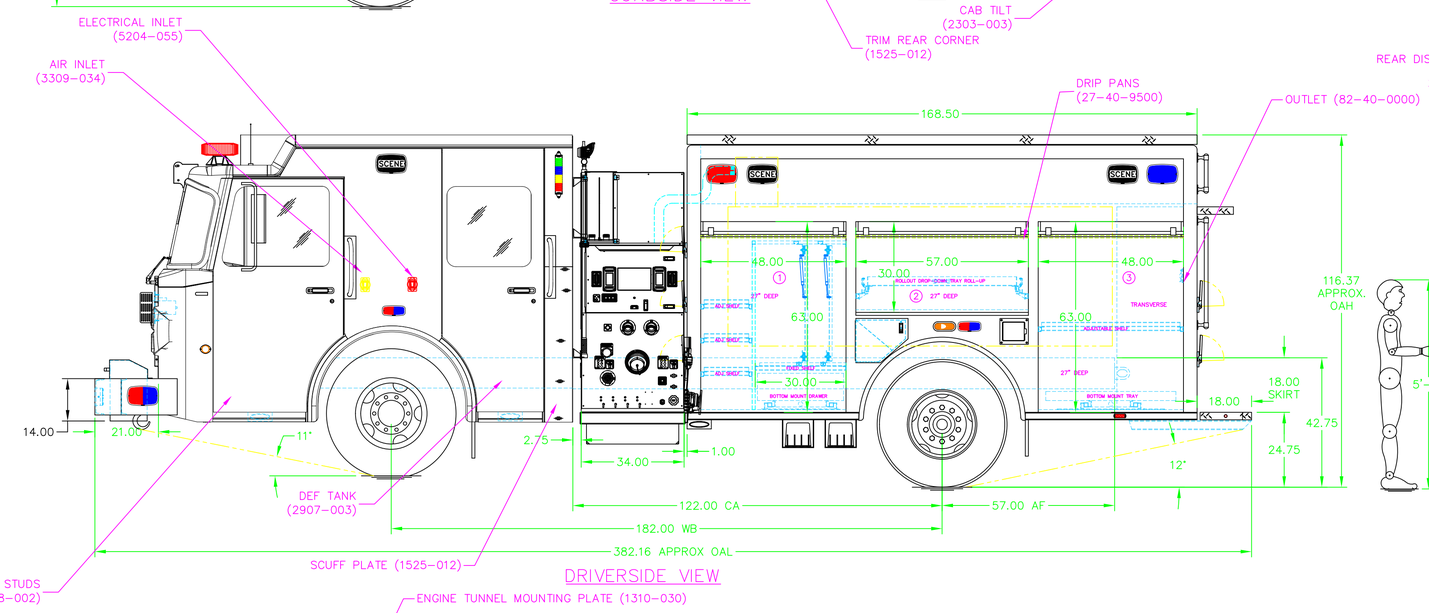

DRIVERSIDE VIEW

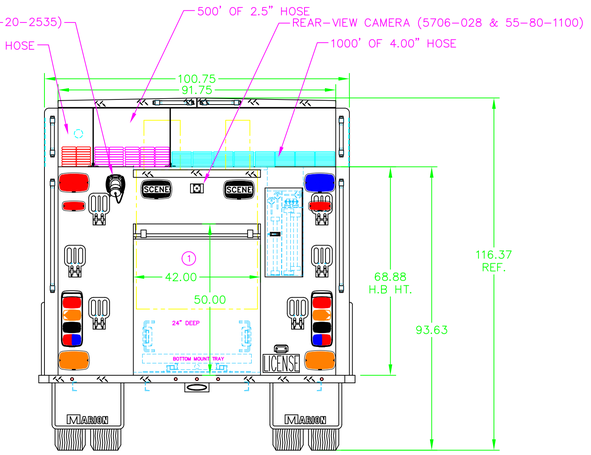

REAR VIEW

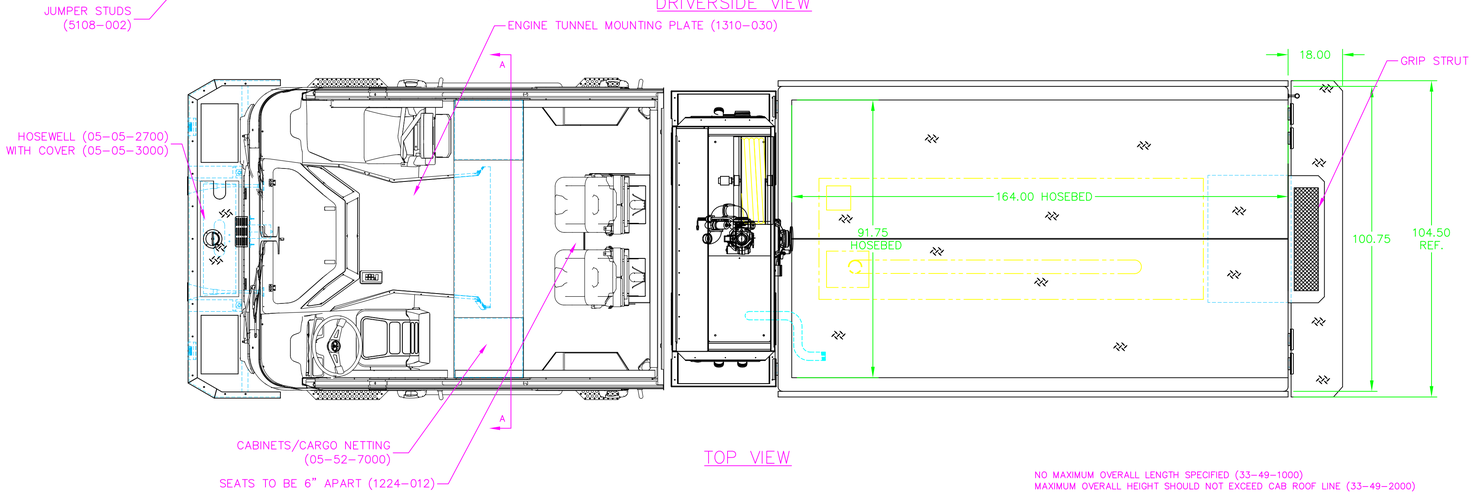

TOP VIEW

NO MAXIMUM OVERALL LENGTH SPECIFIED (33-49-1000)
MAXIMUM OVERALL HEIGHT SHOULD NOT EXCEED CAB ROOF LINE (33-49-2000)

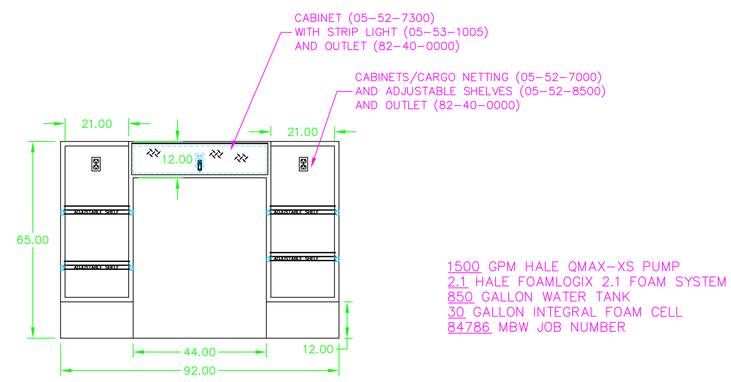

SECTION A

1500 GPM HALE QMAX-XS PUMP
2.1 HALE FOAMLOGIX 2.1 FOAM SYSTEM
850 GALLON WATER TANK
30 GALLON INTEGRAL FOAM CELL
84786 MBW JOB NUMBER

LTR	DATE	BY	DESCRIPTION
B	3/22/19	CZ	UPDATED AFTER PRE-BUILD MEETING
A	12/18/18	GRS	REVISED IN PREPARATION FOR SUBMITTAL

MARION RESERVES THE RIGHT TO MAKE MINOR DIMENSIONAL CHANGES, AND DESIGN AND COMPONENT CHANGES FOR PRODUCT IMPROVEMENT

CHASSIS SPECS	
CHASSIS	SPARTAN
MODEL	GLADIATOR EMFD 10"96"
WB	182"
CA	122"

MARION
MARION BODY WORKS, INC.
P.O. BOX 500
MARION WISCONSIN 54950-0500
715/754-5261 FAX 715/754-5776

TITLE PUMPER, MID, HALE, 1500/850/30
FOR LAKE FOREST, IL
DRAWN BY JK APPRVD BY DATE 9/4/18 SCALE 1/20
DRG. NO. 98049160 SHEET 1 OF 1