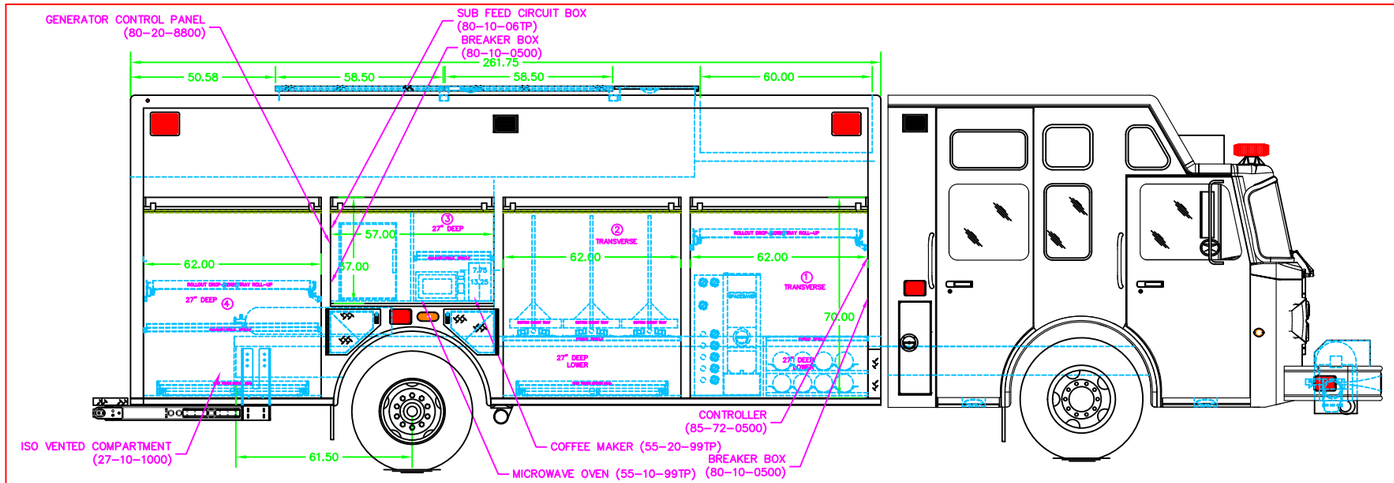

CURBSIDE VIEW

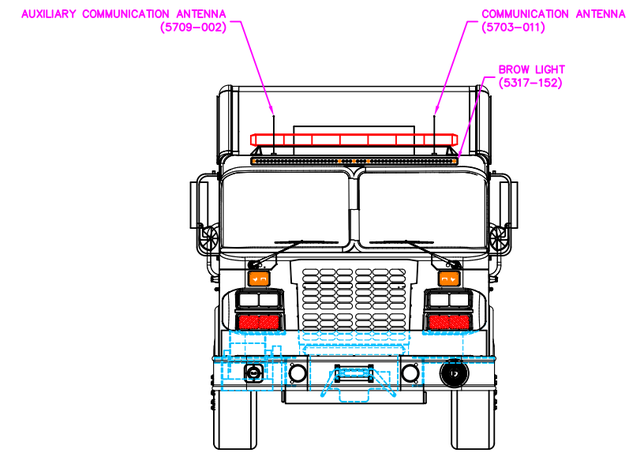

FRONT VIEW

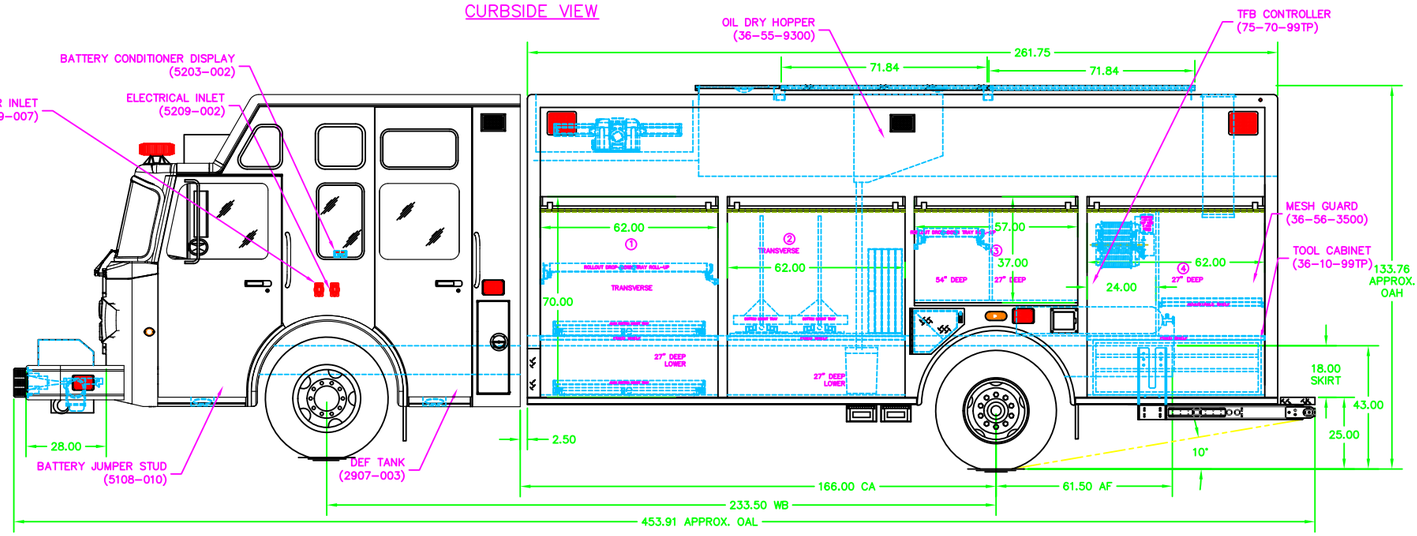

DRIVERSIDE VIEW

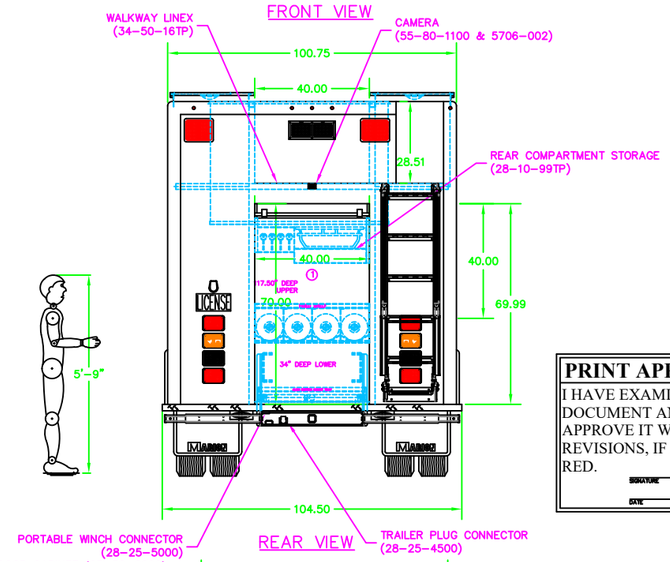

REAR VIEW

PRINT APPROVAL

I HAVE EXAMINED THIS DOCUMENT AND APPROVE IT WITH NOTED REVISIONS, IF ANY, IN RED.

SIGNATURE _____

DATE _____

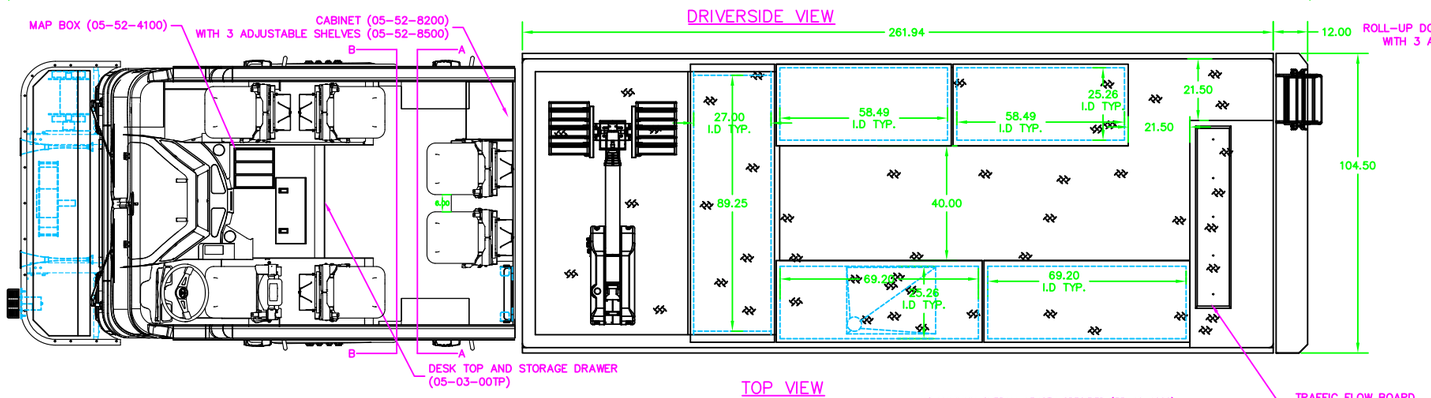

TOP VIEW

NO MAXIMUM OVERALL LENGTH SPECIFIED (33-49-1000)
NO MAXIMUM OVERALL HEIGHT SPECIFIED (33-49-2000)

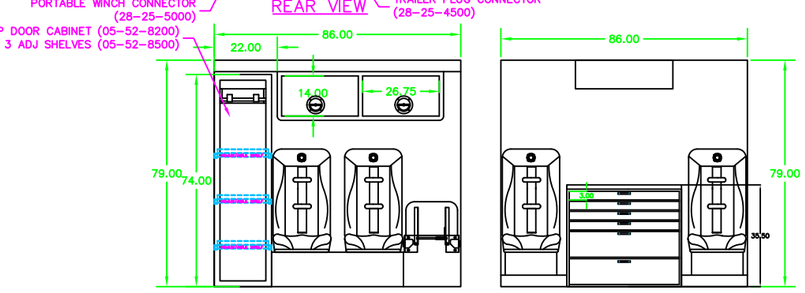

SECTION A-A

SECTION B-B

85792 MBW JOB NUMBER

LTR	DATE	BY	DESCRIPTION
E	7/12/19	CZ	REVISED PER PRE-BUILD MARK UP
D	7/10/19	GRS	REVISED IN PREPARATION FOR PRE-BUILD MEETING
C	7/2/19	CZ	REVISED PER CHANGE ORDER 6/13/19
B	5/9/19	CZ	REVISED PRIOR TO SUBMITTAL
A	4/1/19	CZ	REV PER EMAIL RECEIVED ON 4/1/19 SS TO ALUMINUM

MARION RESERVES THE RIGHT TO MAKE MINOR DIMENSIONAL CHANGES, AND DESIGN AND COMPONENT CHANGES FOR PRODUCT IMPROVEMENT

CHASSIS SPECS

CHASSIS: SPARTAN

MODEL: METRO STAR LFD 36" BBC

WB: 233.5" CA: 166.0"

MARION

MARION BODY WORKS, INC.
P.O. BOX 880
MARION WISCONSIN 54950-0500
715/754-5261 FAX 715/754-5776

TITLE: 22' RESCUE VEHICLE

FOR: COLUMBUS, WI

DRAWN BY: CZ | APPRVD BY: | DATE: 3/8/19 | SCALE: 1/20

DRG. NO. 98049980 | SHEET 1 OF 1