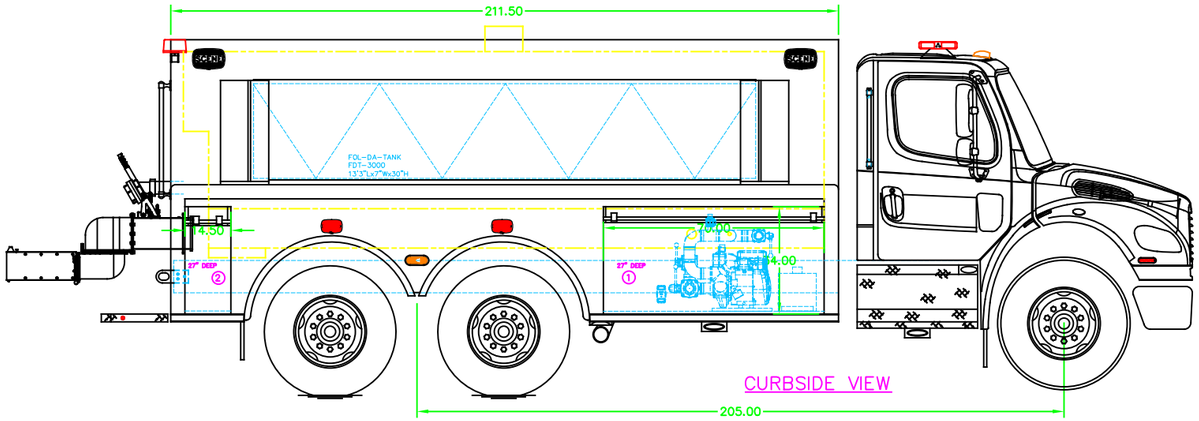

CURBSIDE VIEW

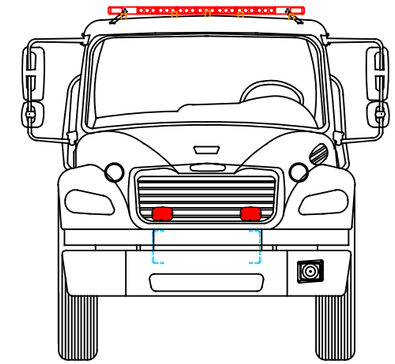

FRONT VIEW

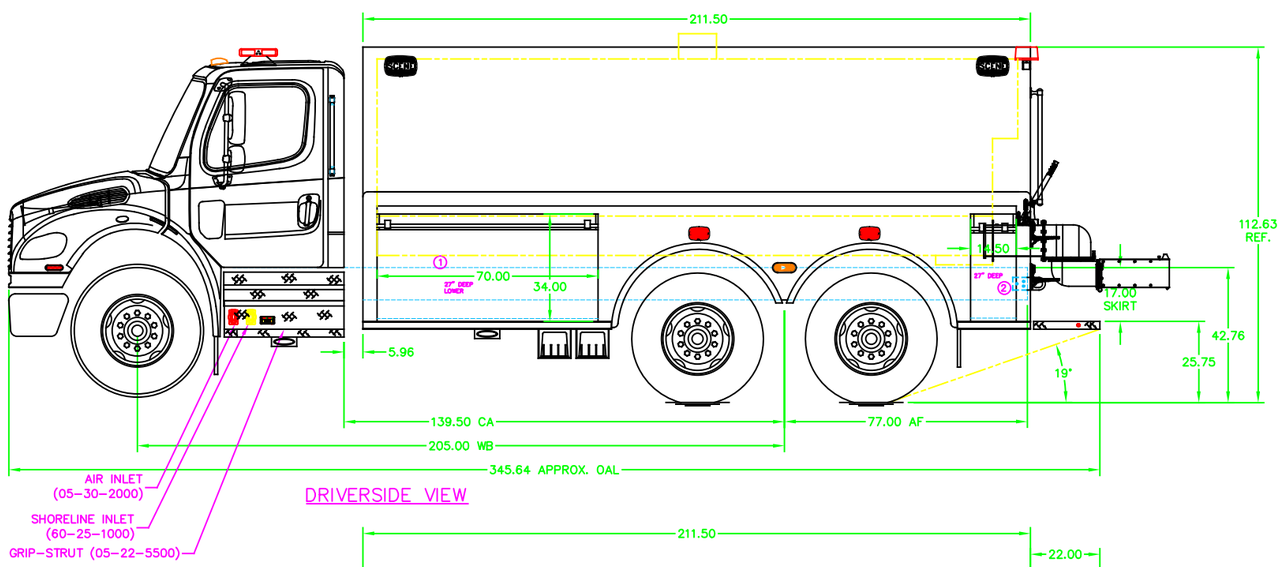

DRIVERSIDE VIEW

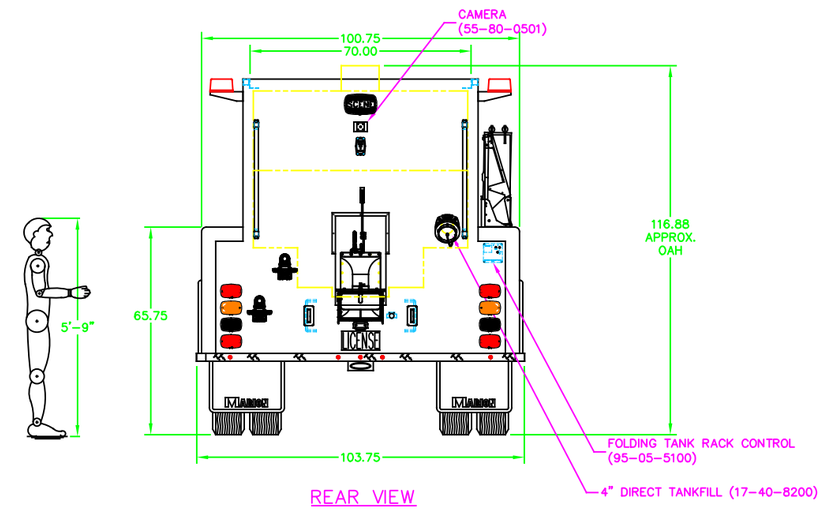

REAR VIEW

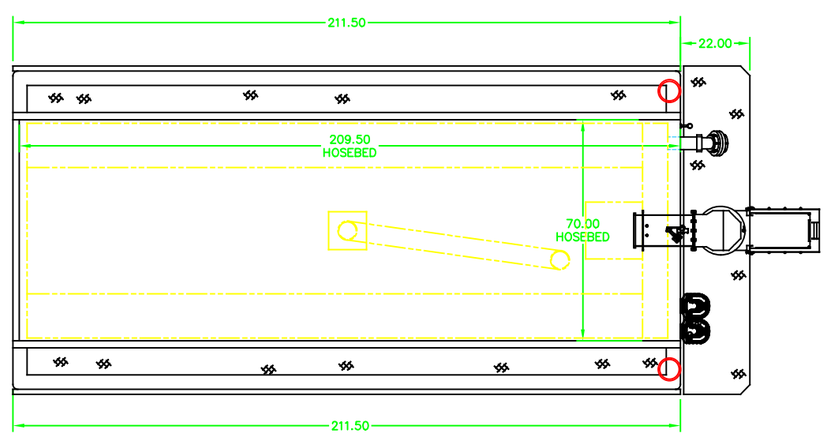

TOP VIEW

NO MAXIMUM OVERALL LENGTH SPECIFIED (33-49-1000)
NO MAXIMUM OVERALL HEIGHT SPECIFIED (33-49-2000)

APPROVAL

I HAVE EXAMINED THIS DOCUMENT AND APPROVE IT WITH NOTED REVISIONS, IF ANY, IN RED.

SIGNATURE

DATE

3000 GALLON WATER TANK
97651 MBW JOB NUMBER

LTR	DATE	BY	DESCRIPTION
			MARION RESERVES THE RIGHT TO MAKE MINOR DIMENSIONAL CHANGES, AND DESIGN AND COMPONENT CHANGES FOR PRODUCT IMPROVEMENT

CHASSIS SPECS
CHASSIS: FREIGHTLINER
MODEL: M2 106
WB: XXX" CA: XXX"

MARION
MARION BODY WORKS, INC.
P.O. BOX 500
MARION WISCONSIN 54950-0500
715/754-5261 FAX 715/754-5776

TITLE: TANKER, 3000 GALLON
FOR: NEW LONDON, WI
DRAWN BY: GRS APPRVD BY: DATE: 2/22/24 SCALE: 1/20
DRG. NO. 98301352 SHEET 1 OF 1